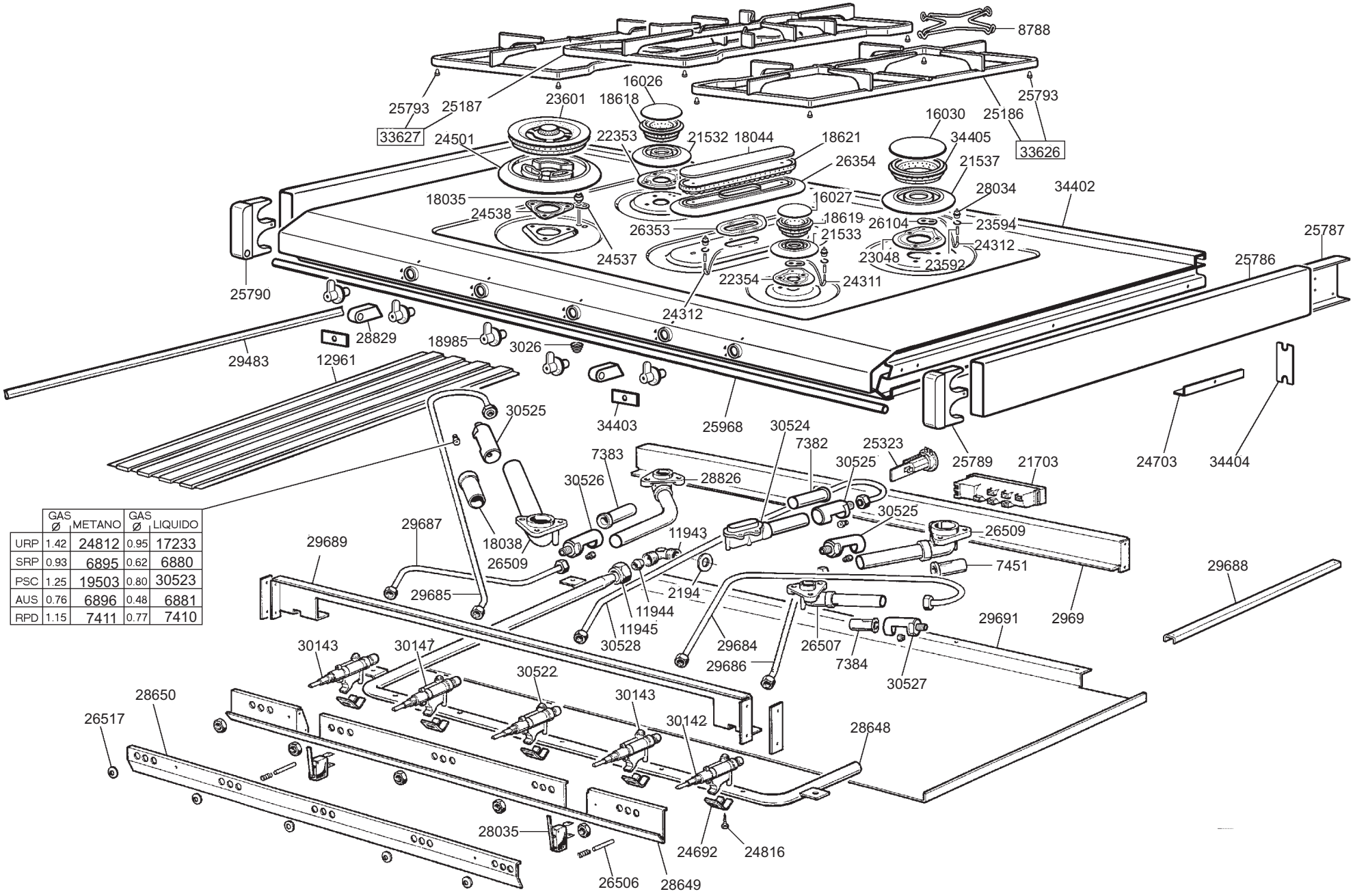

	GAS Ø	METANO	GAS Ø	LIQUIDO
URP	1.42	24812	0.95	17233
SRP	0.93	6895	0.62	6880
PSC	1.25	19503	0.80	30523
AUS	0.76	6896	0.48	6881
RPD	1.15	7411	0.77	7410